PARK N POOL
130-B Walker St. Lexington, VA 24450
(877)727-5676 www.parknpool.com

12FR-695
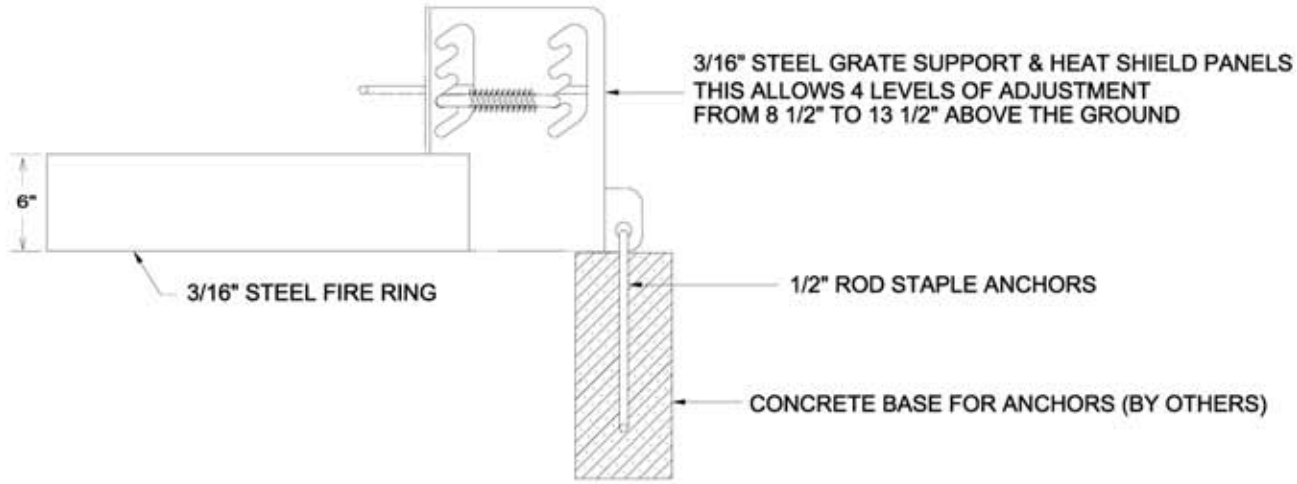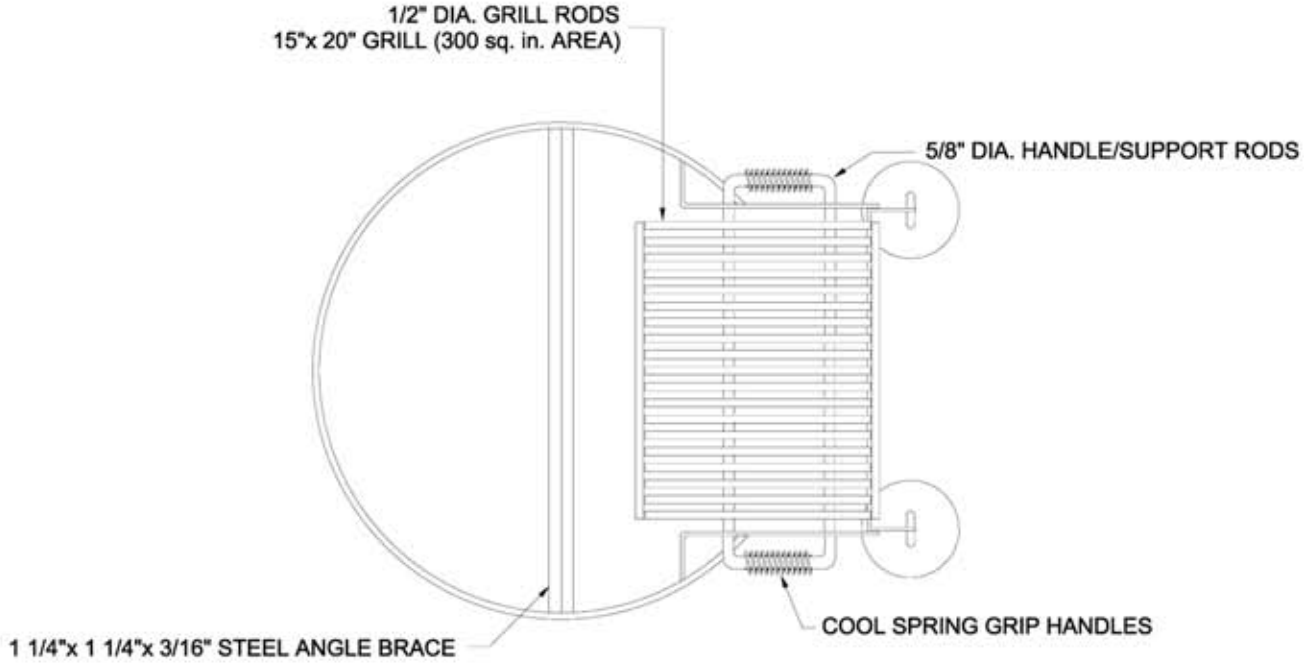
Fire Ring with Adjustable 4-Position Cooking Ring
86 lbs.